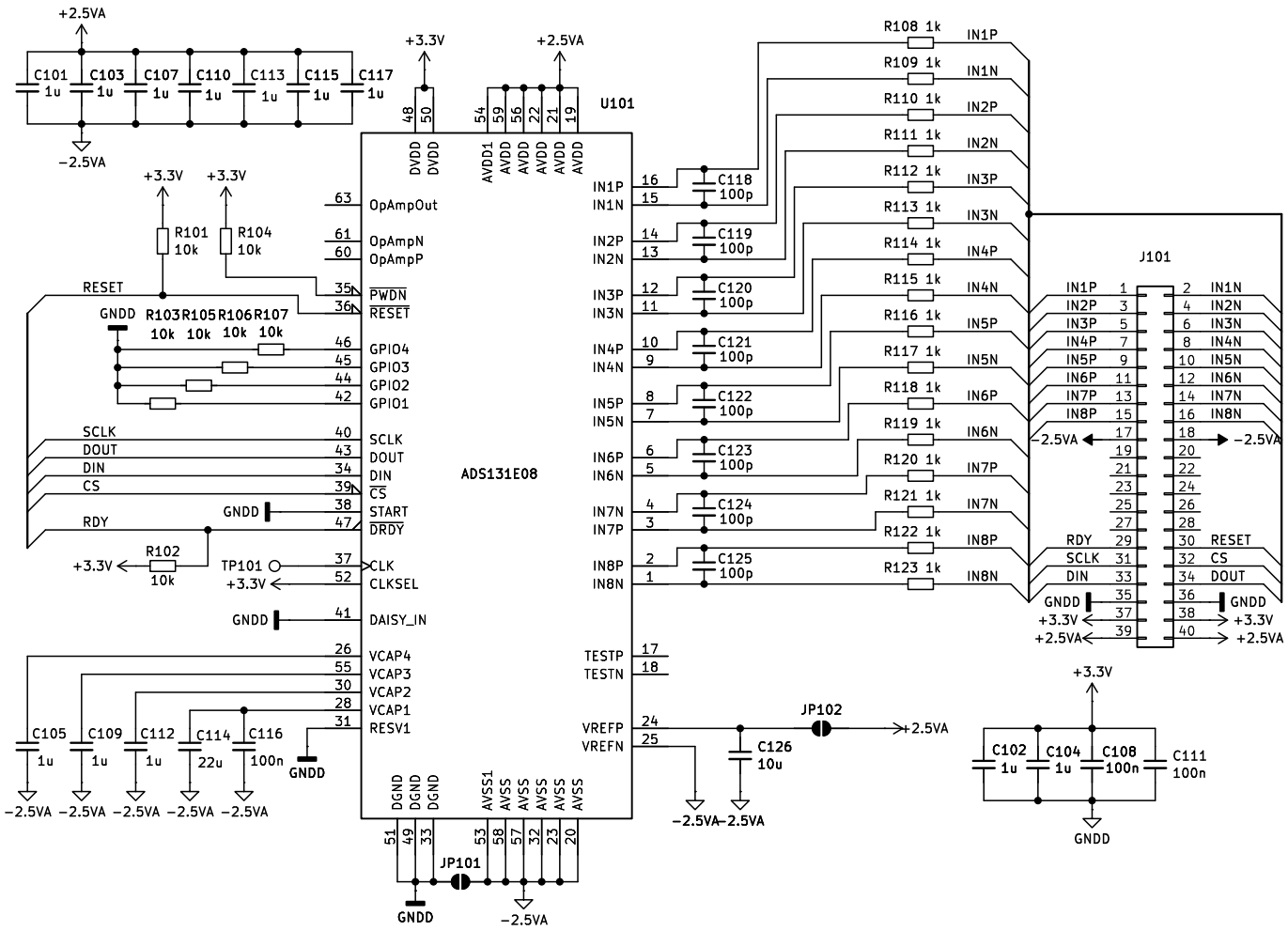
+2.5VA
C101 1u
C103 1u
C107 1u
C110 1u
C113 1u
C115 1u
C117 1u
−2.5VA
+3.3V
+2.5VA
U101
DVDD DVDD
AVDD1 AVDD AVDD AVDD AVDD AVDD
R101 10k
R104 10k
RESET
GNDD
R103 10k
R105 10k
R106 10k
R107 10k
SCLK
DOUT
DIN
CS
RDY
R102 10k
TP101
OpAmpOut
OpAmpN
OpAmpP
PWDN
RESET
GPIO4
GPIO3
GPIO2
GPIO1
SCLK
DOUT
DIN
CS
START
DRDY
CLK
CLKSEL
DAISY_IN
VCAP4
VCAP3
VCAP2
VCAP1
RESV1
ADS131E08
IN1P
IN1N
IN2P
IN2N
IN3P
IN3N
IN4P
IN4N
IN5P
IN5N
IN6P
IN6N
IN7N
IN7P
IN8P
IN8N
TESTP
TESTN
VREFP
VREFN
C118 100p
C119 100p
C120 100p
C121 100p
C122 100p
C123 100p
C124 100p
C125 100p
R108 1k
R109 1k
R110 1k
R111 1k
R112 1k
R113 1k
R114 1k
R115 1k
R116 1k
R117 1k
R118 1k
R119 1k
R120 1k
R121 1k
R122 1k
R123 1k
J101
C105 1u
C109 1u
C112 1u
C114 22u
C116 100n
DGND DGND DGND
AVSS1 AVSS AVSS AVSS AVSS AVSS
JP101
JP102
C126 10u
C102 1u
C104 1u
C108 100n
C111 100n

07.11.2024