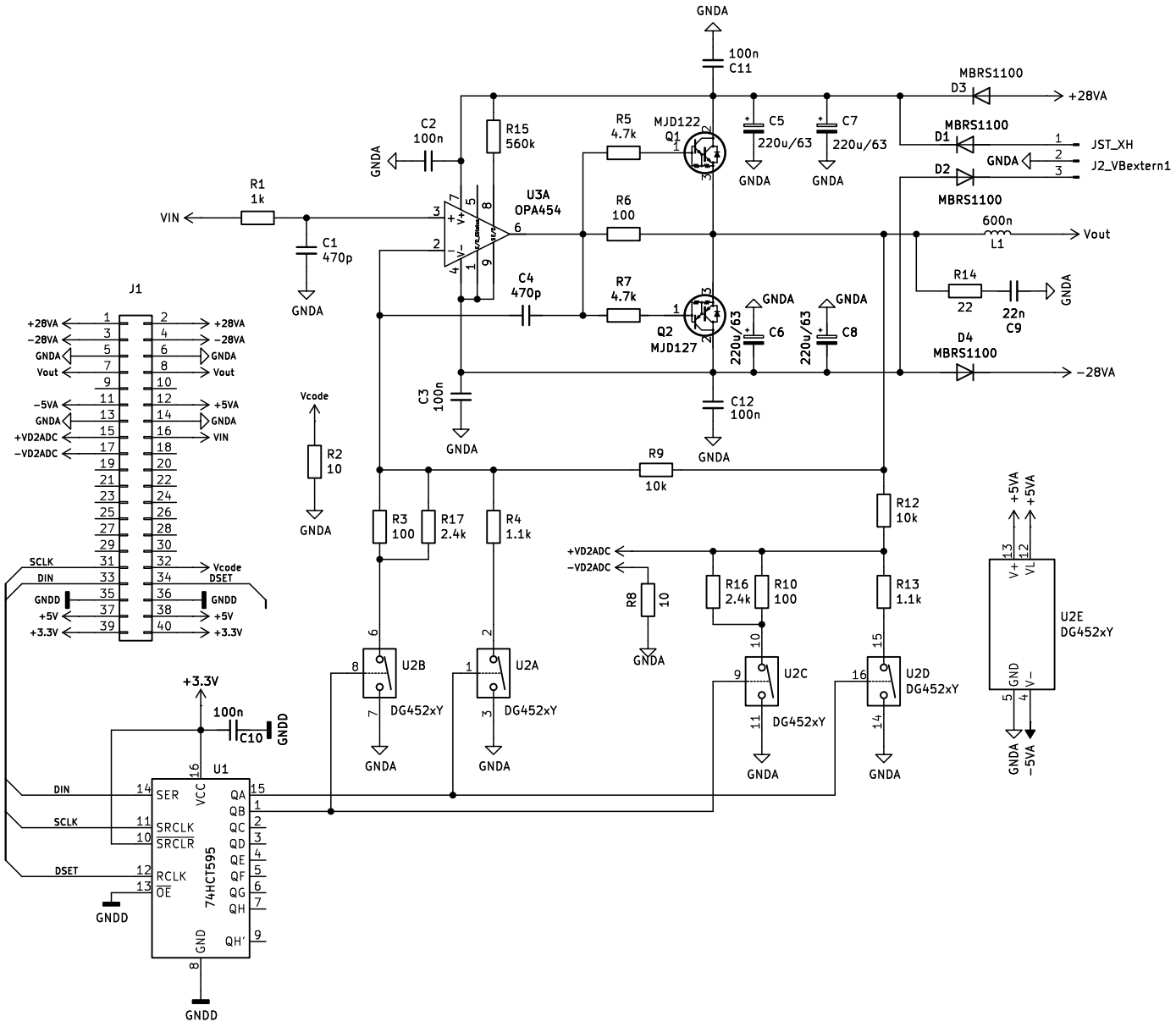
GNDA
100n
C11
MBRS1100
D3
+28VA
C2
100n
R15
560k
R5
4.7k
MJD122
Q1
C5
220u/63
C7
220u/63
MBRS1100
D1
JST_XH
J2_VBextern1
D2
MBRS1100
R1
1k
VIN
C1
470p
U3A
OPA454
R6
100
600n
L1
Vout
C4
470p
R7
4.7k
Q2
MJD127
C6
220u/63
C8
220u/63
R14
22
22n
C9
D4
MBRS1100
-28VA
J1
+28VA
-28VA
GNDA
Vout
-5VA
+5VA
+VD2ADC
-VD2ADC
VIN
SCLK
DIN
Vcode
DSET
GNDD
+5V
+3.3V
C3
100n
C12
100n
R2
10
R9
10k
R3
100
R17
2.4k
R4
1.1k
R12
10k
R13
1.1k
R8
10
R16
2.4k
R10
100
U2B
U2A
U2C
U2D
DG452xY
U2E
DG452xY
+5VA
-5VA
+3.3V
100n
C10
U1
74HCT595
SER
SRCLK
SRCLR
RCLK
OE
VCC
GND
QA
QB
QC
QD
QE
QF
QG
QH
QH'